SPARE PART DRAWING
MK-4000

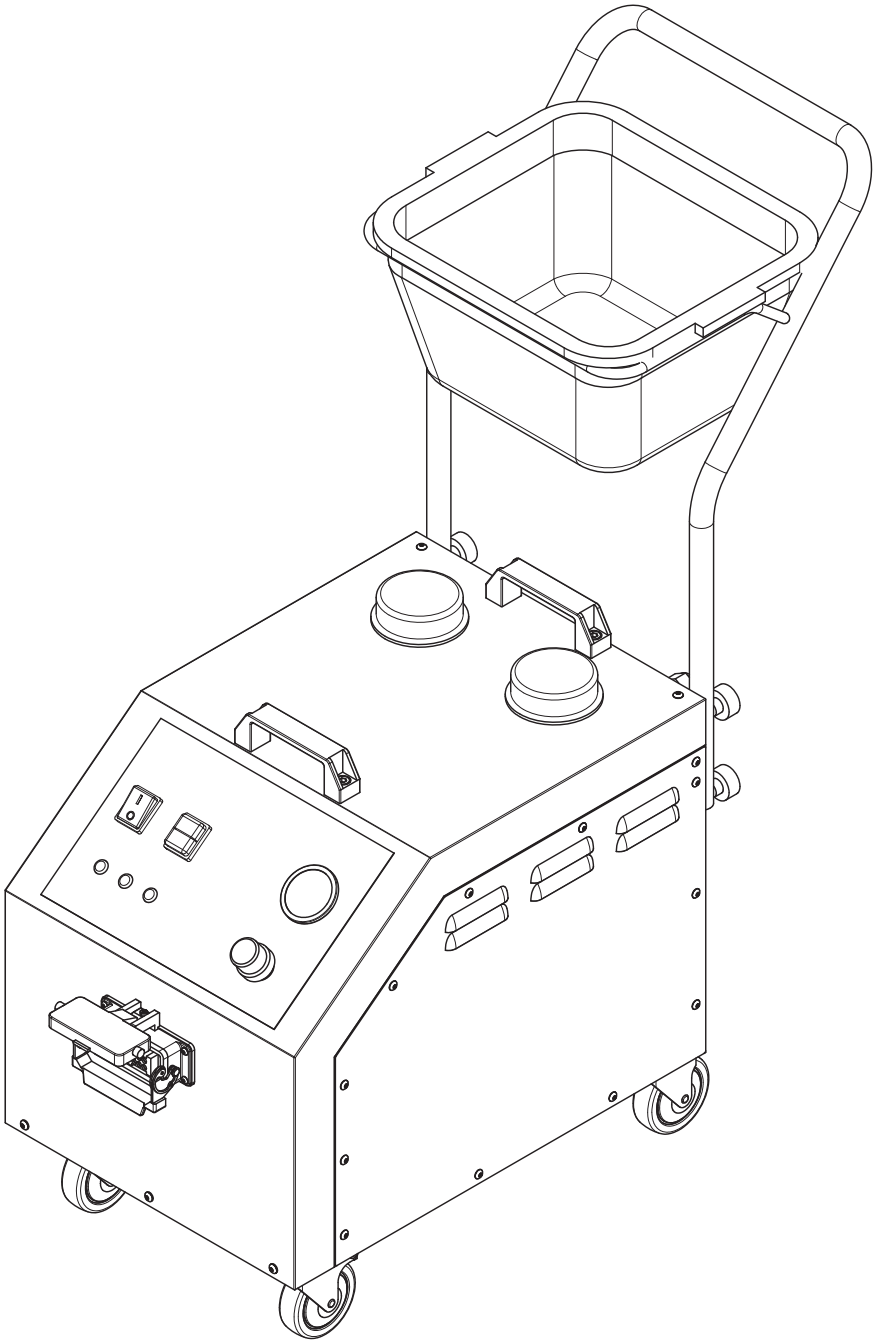

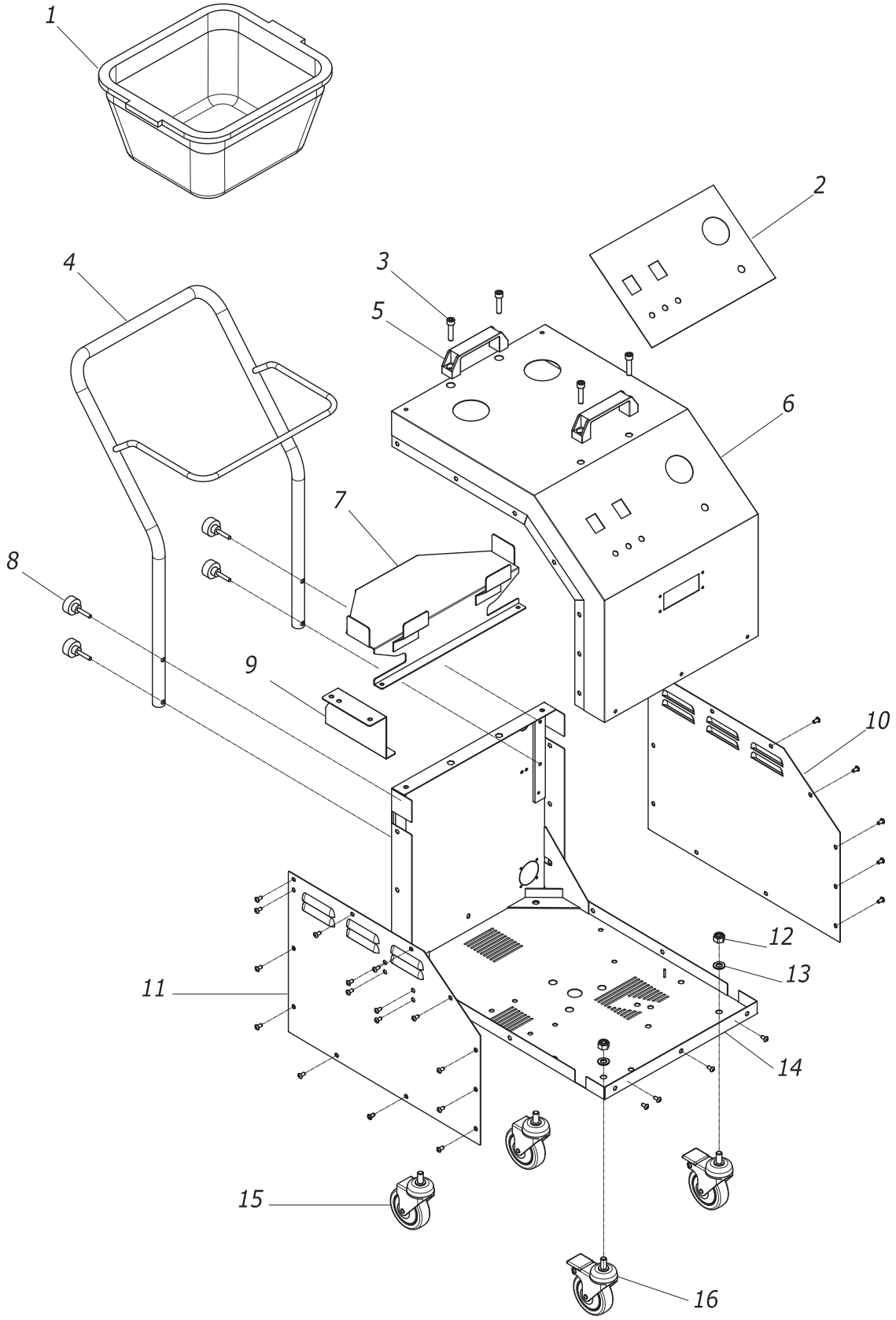

00	05/2020	TAB01	Spare Parts Drawing - GV0318	GV00318
REV	DATA	N°DOC	DESCRIPTION	PRUDUCT COD.

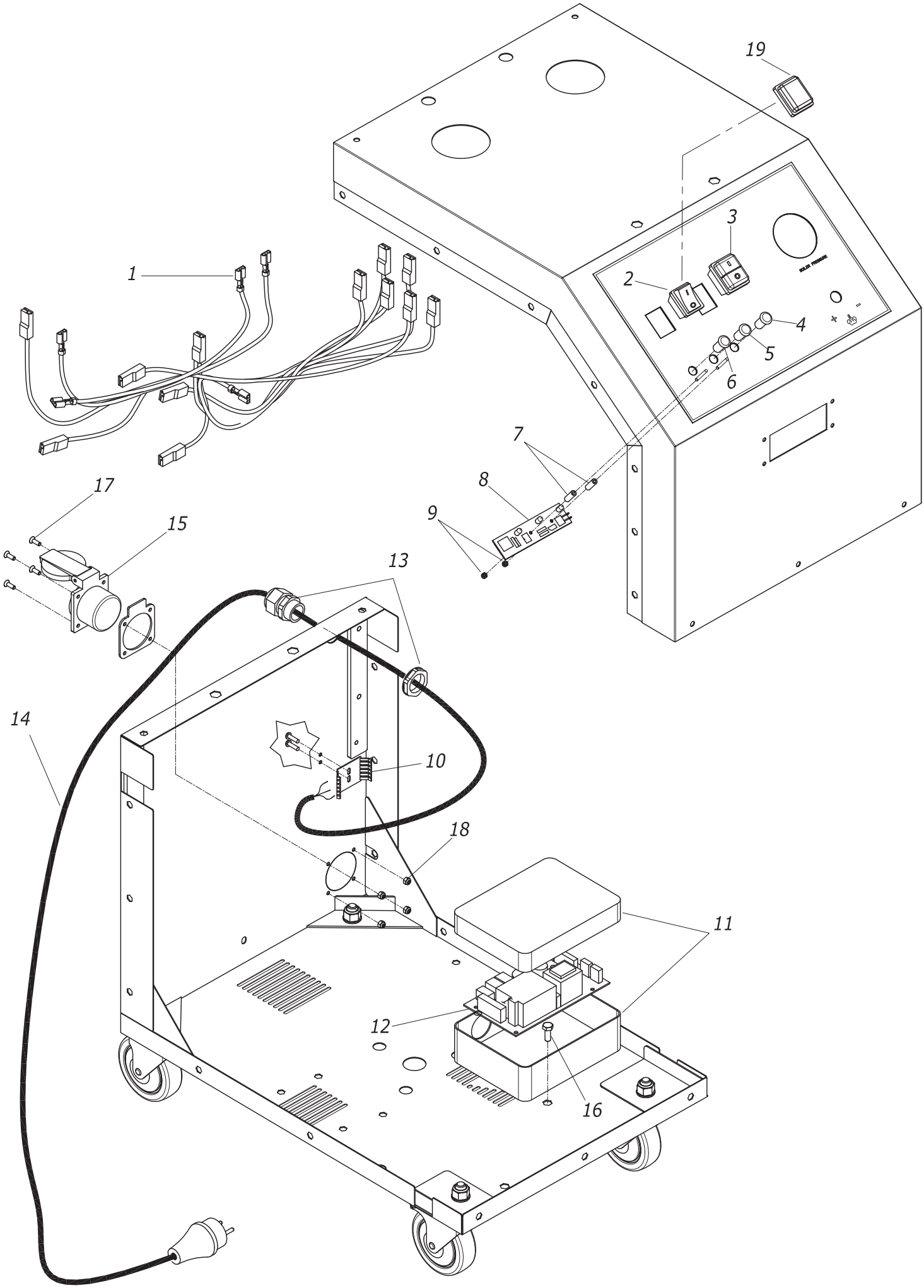

00	05/2020	TAB02	Spare Parts Drawing - GV0318	GV00318
REV	DATA	N°DOC	DESCRIPTION	PRUDUCT COD.

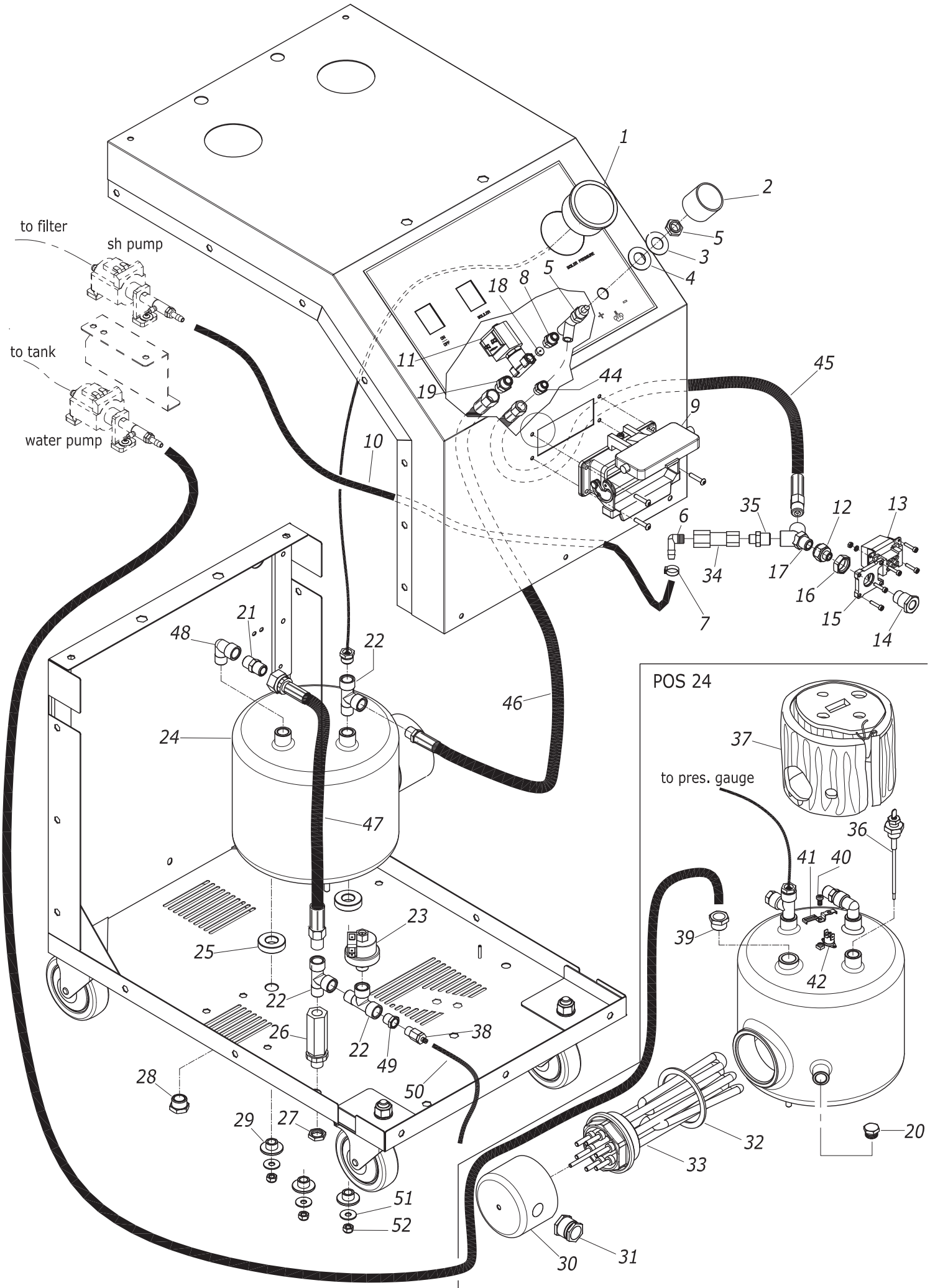

00	05/2020	TAB03	Spare Parts Drawing - GV0318	GV00318
REV	DATA	N°DOC	DESCRIPTION	PRUDUCT COD.

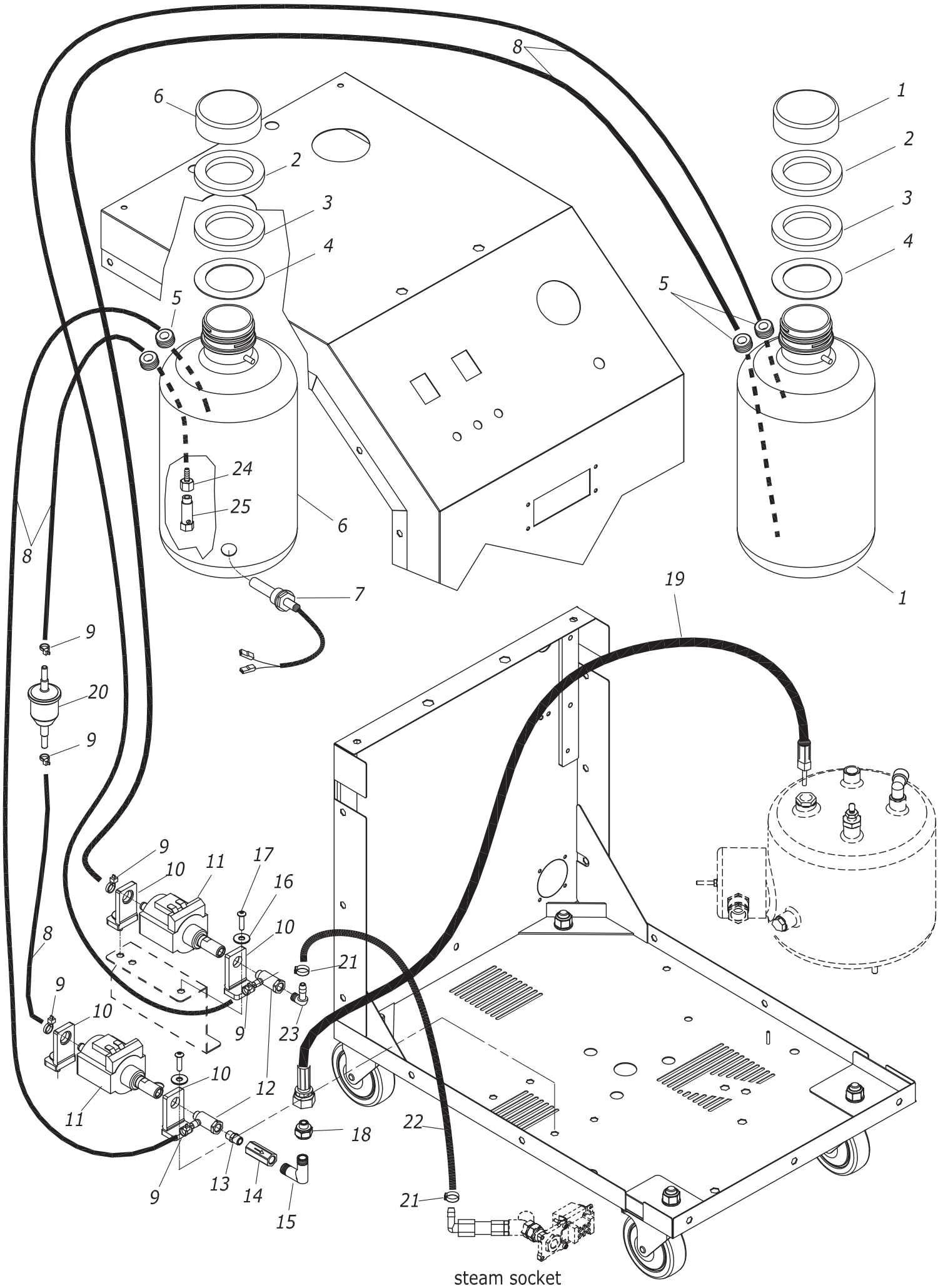

01	09/2020	TAB04	Spare Parts Drawing - GV0318	GV00318
REV	DATA	N°DOC	DESCRIPTION	PRUDUCT COD.